Track Light

Play Magnets 114-119
Play Small 115 Play Medium 116 Play Large 117

Prod. name Nome prod.	**Product** Prodotto	**Size** Dimensioni (mm • in)	**Optics** Ottica	**Light source** Sorg. lum.	**Pag.**
Play Small		15,0 × 38,5 mm 0,59 × 1,52 " Ø 15,0 mm • 0,59 "	20° • 25° • 38° • 44° • 62°	1,1 W	115
Play Medium		29,0 × 59,0 mm 1,14 × 2,32 " Ø 29,0 mm • 1,14 "	16° • 18° • 30° • 47°	1,6 W	116
Play Large		36,0 × 74,0 mm 1,42 × 2,91 " Ø 36,0 mm • 1,42 "	14° • 20° • 32° • 52°	6,0 W	117

Play Magnet

Play Small

Body Corpo

Adjustable spot with magnetic base for mini track
Spot orientabile con base magnetica per mini track

Fastening Fissaggio	With magnets on mini track	Con magneti su mini track
Optics Ottica	20° • 25° • 38° • 44° • 62°	20° • 25° • 38° • 44° • 62°
Finishing Finitura	● Black anodized	● Anodica nera

Listings and marks
Certificazioni e marchi

LED
LED

Light Luce

Light source Sorgente luminosa	LED 1,1 W
CCT K	● 2700 K ● 3000 K ● 3500 K ● 4000 K ● 5000 K
CRI **R9** **Rf** @ 3000 K **Rg** @ 3000 K **MacAdam ellipse**	Min 90 Min 80 96 103 2
Luminous flux Flusso luminoso ● 3000 K	115 lm @ 350 mA
Input voltage Tensione di ingresso	24 V DC

Dimensions Dimensioni

Scale/Scala 1:1

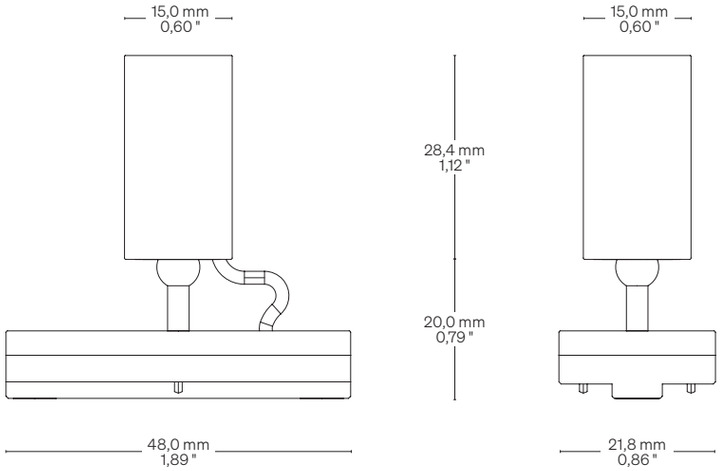

Play Medium

Body Corpo

Adjustable spot with magnetic base for mini track
Spot orientabile con base magnetica per mini track

Fastening Fissaggio	With magnets on mini track	Con magneti su mini track
Optics Ottica	16° • 18° • 30° • 47°	16° • 18° • 30° • 47°
Finishing Finitura	● Black anodized	● Anodica nera

Listings and marks
Certificazioni e marchi

IP20

LED
LED

NICHIA

Light Luce

Light source Sorgente luminosa	LED 1,6 W
CCT K	● 2700 K ● 3000 K ● 3500 K ● 4000 K ● 5000 K
CRI **R9** **Rf** @ 3000 K **Rg** @ 3000 K **MacAdam ellipse**	Min 90 Min 80 96 103 2
Luminous flux Flusso luminoso ● 3000 K	187 lm @ 500mA
Input voltage Tensione di ingresso	24 V DC

Dimensions Dimensioni

Scale/Scala 1:1

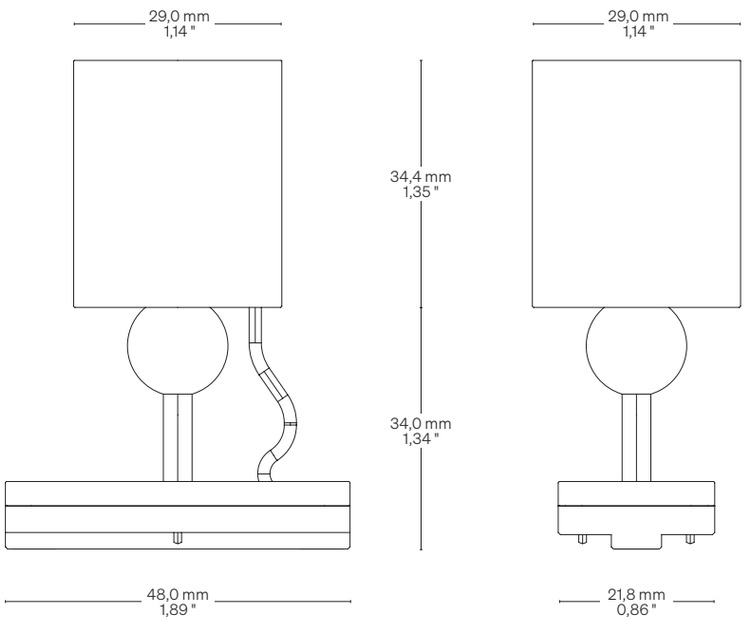

Play Large

Diffusing filter/
Filtro diffondente

Honeycomb

Body Corpo

Adjustable spot with magnetic base for mini track
Spot orientabile con base magnetica per mini track

Fastening Fissaggio	With magnets on mini track	Con magneti su mini track
Optics Ottica	14° • 20° • 32° • 52°	14° • 20° • 32° • 52°
Finishing Finitura	● Black anodized	● Anodica nera
Accessories Accessori	Diffusing filter Honeycomb	Filtro diffondente Honeycomb
Listings and marks Certificazioni e marchi		**LED** LED

Light Luce

Light source Sorgente luminosa	LED 6,0 W
CCT K	● 2700 K ● 3000 K ● 3500 K ● 4000 K ● 5000 K
CRI **R9** **Rf** @ 3000 K **Rg** @ 3000 K **MacAdam ellipse**	Min 90 Min 80 92 100 2
Luminous flux Flusso luminoso ● 3000 K	620 lm @ 350mA
Input voltage Tensione di ingresso	24 V DC

Dimensions Dimensioni

Scale/Scala 1:1

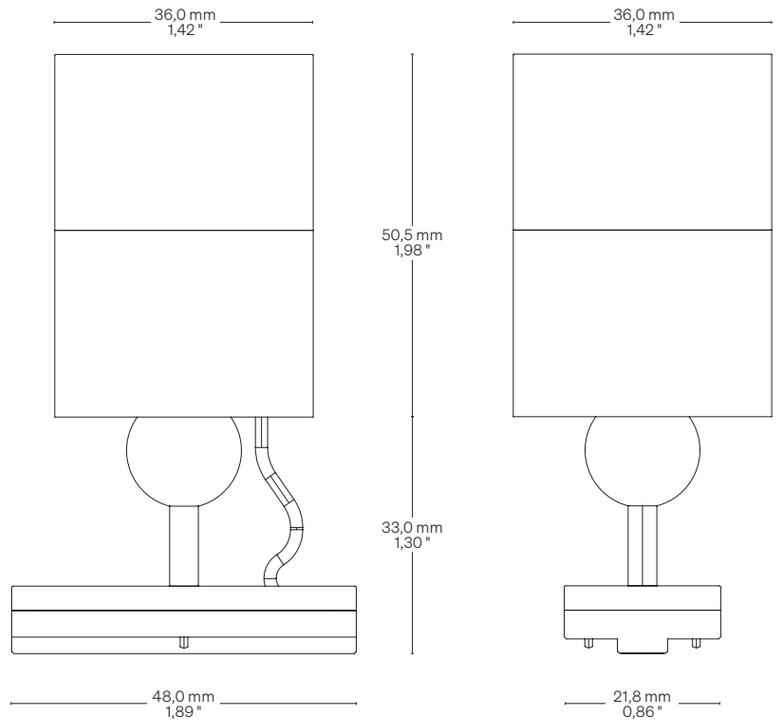

Play Magnet

Fastening options Opzioni di fissaggio

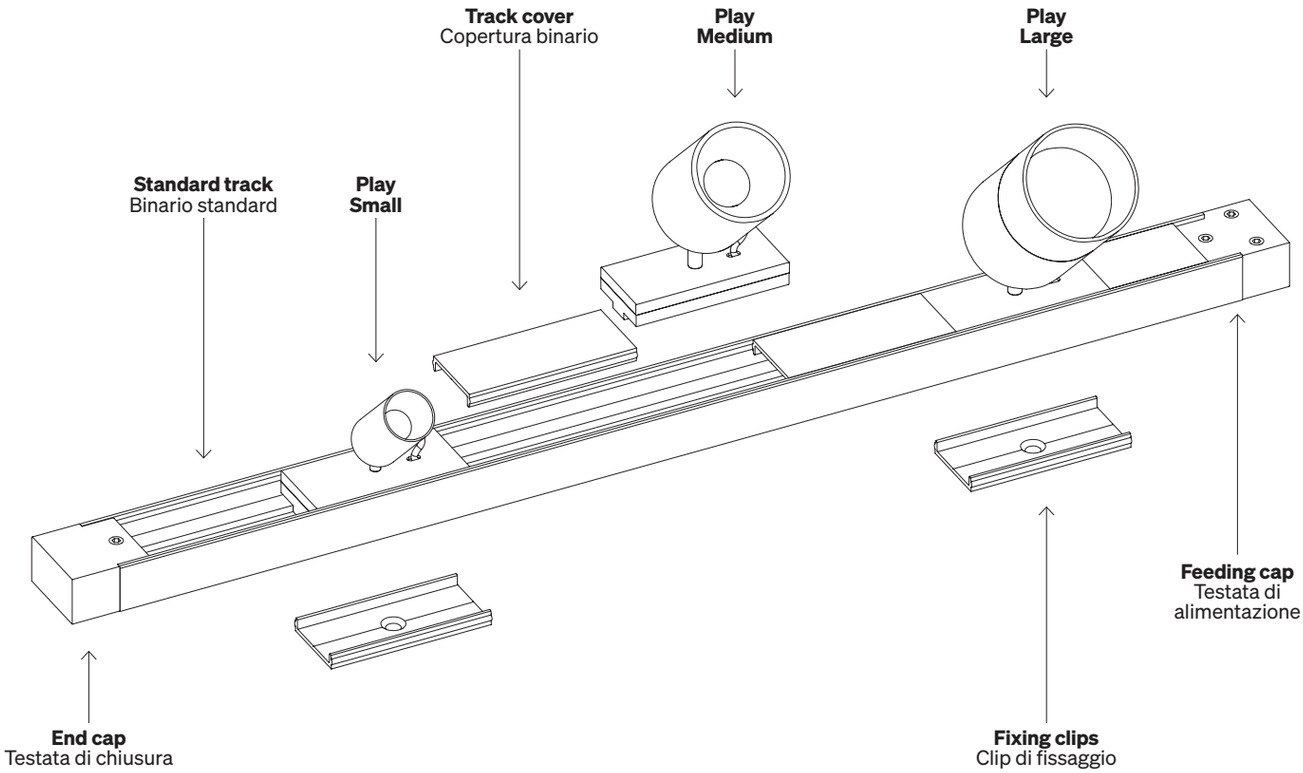

Standard track Binario standard

Scale/Scala 1:1

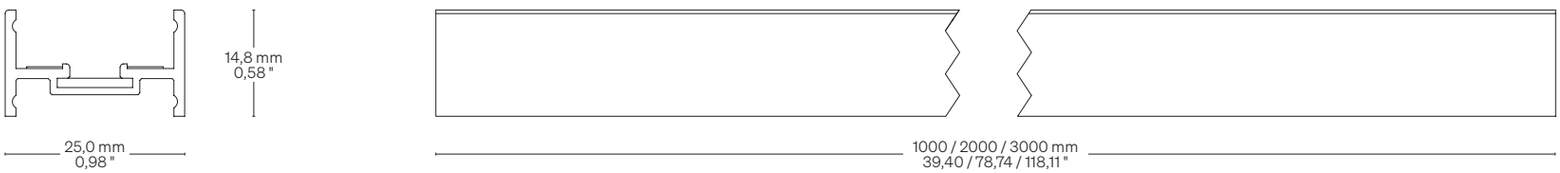

F Standard finishing: Black anodized
Finitura standard: Anodica nera

Component dimensions Dimensioni componeti

Scale/Scala 1:2

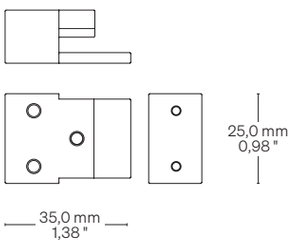

Feeding cap
Testata di alimentazione

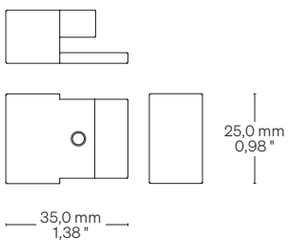

End cap
Testata di chiusura

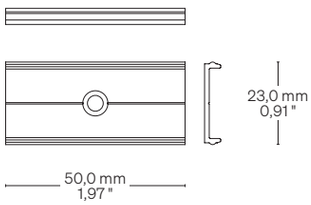

Fixing clips
Clip di fissaggio

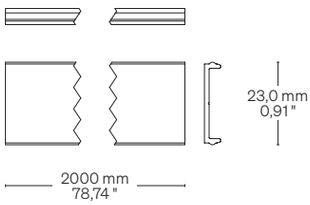

Track cover
Copertura binario

F Standard finishing: Black anodized
Finitura standard: Anodica nera

Order code Codice ordine

Basic code Codice base	**PTS**	Play Small LED 1,1 W
CCT K CCT K	**WW27** **WW30** **NW35** **NW** **CW**	2700 K 3000 K 3500 K 4000 K 5000 K
Optics Ottica	**20** **25** **38** **44** **62**	20° 25° 38° 44° 62°
Order example Esempio ordine	**PTS WW27 20** Play Small, LED 1,1 W, Warm White 2700, 20° optic Play Small, LED 1,1 W, Warm White 2700, Ottica 20°	

Order code Codice ordine

Basic code Codice base	**PTM**	Play Medium LED 1,6 W
CCT K CCT K	**WW27** **WW30** **NW35** **NW** **CW**	2700 K 3000 K 3500 K 4000 K 5000 K
Optics Ottica	**16** **18** **30** **47**	16° 18° 30° 47°
Order example Esempio ordine	**PTM WW27 16** Play Medium, LED 1,6 W, Warm White 2700, 16° optic Play Medium, LED 1,6 W, Warm White 2700, Ottica 16°	

Order code Codice ordine

Basic code Codice base	**PTL**	Play Large LED 6,0 W
CCT K CCT K	**WW27** **WW30** **NW35** **NW** **CW**	2700 K 3000 K 3500 K 4000 K 5000 K
Optics Ottica	**14** **20** **32** **52**	14° 20° 32° 52°
Accessories Accessori	**DF** **HO**	Diffusing filter/ Filtro diffondente Honeycomb
Order example Esempio ordine	**PTL WW27 14 DF** Play Large, LED 6,0 W, Warm White 2700, 14° optic, Diffusing filter Play Large, LED 6,0 W, Warm White 2700, Ottica 14°, Filtro diffondente	

Order code Codice ordine

Components Componenti	**TRKN01**	Standard track 1000 mm • 39,40 " Binario standard 1000 mm
	TRKN02	Standard track 2000 mm • 78,74 " Binario standard 2000 mm
	TRKN03	Standard track 3000 mm • 118,11 " Binario standard 3000 mm
	TRKNFC	Feeding cap Testata di alimentazione
	TRKNEC	End cap Testata di chiusura
	TRKNCL	Fixing clips Clip di fissaggio
	TRKNCO	Track cover 2000 mm • 78,74 " Copertura binario 2000 mm